SKINNER

Auctioneer and Appraisers of Antiques and Fine Art

British Coin Wts
Irish

Prices include buyer's premium.

Science & Technology, 05/03/2003 10:00 AM, Venue: Bolton

Lot numbers which are omitted were withdrawn or did not sell. We are not responsible for typographical errors or omissions.

Lot	Price	Lot	Price	Lot	Price	Lot	Price	Lot	Price	Lot	Price
340	$176.25	365	$88.13	395	$587.50	435	$117.50	460	$146.88	483	$293.75
341	$2,467.50	367	$117.50	396	$1,175.00	437	$88.13	461	$146.88	484	$293.75
342	$205.63	369	$117.50	397	$1,057.50	439	$1,527.50	462	$176.25	485	$940.00
343	$29.38	370	$70.50	398	$293.75	440	$1,997.50	463	$235.00	486	$1,410.00
344	$117.50	372	$117.50	399	$117.50	441	$411.25	464	$205.63	487	$1,527.50
345	$822.50	373	$82.25	401	$117.50	442	$940.00	465	$176.25	488	$881.25
346	$205.63	375	$176.25	402	$88.13	443	$1,175.00	466	$264.38	489	$881.25
347	$117.50	377	$176.25	404	$117.50	444	$1,116.25	467	$58.75	490	$1,880.00
348	$1,997.50	378	$88.13	405	$235.00	445	$117.50	468	$176.25	491	$998.75
349	$411.25	379	$264.38	406	$176.25	446	$117.50	469	$58.75	492	$881.25
350	$3.53	380	$205.63	407	$205.63	447	$82.25	470	$88.13	493	$146.88
352	$176.25	381	$117.50	408	$176.25	448	$146.88	471	$146.88	494	$235.00
352A	$117.50	382	$176.25	409	$440.63	449	$58.75	472	$146.88	495	$1,762.50
353	$146.88	383	$117.50	412	$587.50	450	$58.75	473	$205.63	496	$1,116.25
354	$146.88	384	$323.13	413	$235.00	451	$205.63	474	$117.50	497	$1,997.50
355	$176.25	385	$176.25	415	$381.88	452	$176.25	475	$117.50	498	$411.25
357	$70.50	386	$88.13	416	$323.13	453	$1,175.00	476	$88.13	499	$998.75
358	$176.25	387	$88.13	417	$411.25	454	$117.50	477	$3,055.00	500	$470.00
360	$146.88	390	$117.50	420	$235.00	455	$176.25	478	$1,175.00	501	$2,937.50
361	$117.50	391	$176.25	424	$117.50	456	$293.75	479	$176.25	502	$1,292.50
362	$117.50	392	$58.75	429	$58.75	457	$381.88	480	$235.00		
363	$235.00	393	$58.75	431	$205.63	458	$1,292.50	481	$998.75		
364	$105.75	394	$646.25	433	$58.75	459	$1,645.00	482	$646.25		

Allinder
Allinder
Allinder box
Bernadeau
Seymour
1/4 + 1/2 ?
Trolsmer ?
Kronenberg
Moranville
Dial
Berrian
Berrian Litho
Thompson 1877
McNally in box
Fontaine in box
McNally replaced
McNally wood
replaced
Twin branches
Single arm altered
1850 Scale with 1843 Sick table

Allinder Warranted
tapered box

Allinder in tapered box

Mass Colonial
Billings

Mass Colonial
no maker

Ellinckhuysen

Smithsonian Collection
in store

Money scales + wts of all kinds
sold by Wm Poyntell in
Philadelphia – All gold of equal
fineness with the coins here mentioned
is taken at the Bank of North America
at 6/8 a pennywt

in late 18th century boxends, printed velvet
dated MS in ink 1794

336,755

For mention of scales to test counterfeit
Bankers Mag Sept 1851 from Eckfeldt
p. 186

Recent ctfs p 181

Half eagles 1841, 1845, 1847
Quarter eagles 1843 O Mint

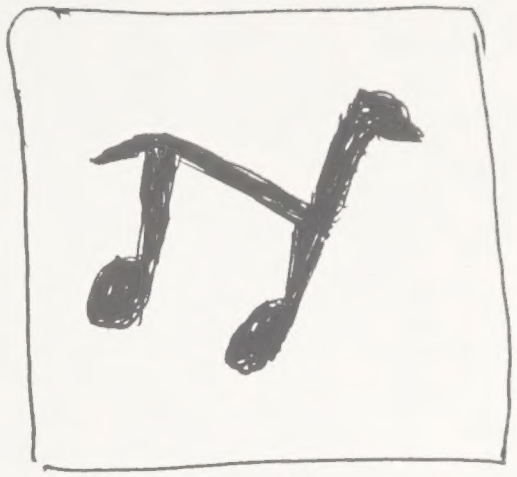

Insignia stamped on each of two scale pans made of brass. Scale is about 1784 and contains a table showing values in Pennsylvania money New York money and sterling.

A small coin scale in a wood rectangular box. The box is probably American as it does not match with English or Continental scale boxes of the period.

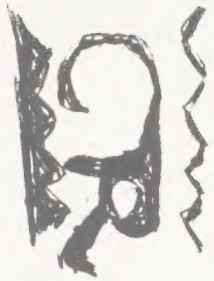

On both scale pans

Stamped on box

TOR.

grains.
09,123,190,50.
counterfeited. The
dated 1876, body of
ll calculated to de-
eady, not dangerous.

189,946.50.
us, and like the 50
e the best we have
Others of 1853---
terfeiters have de-
uarters.

418.

.716,30.
here are but the
of a newly coin-

tion than is

el.

pression of
lds, can be

generally

t of the Law

BANKING AND FINANCIAL

CHASE NATIONAL BANK OF NEW YORK,

117 BROADWAY.

This new Bank, organized by the founders of the First National Bank of New York, who have sold out and retired from that institution, will open for business about September 20, 1877.

SAMUEL C. THOMPSON, President,
late President First National Bank.
JOHN THOMPSON, Vice President,
late Vice President First National Bank.
ISAAC W. WHITE, Cashier.
late of Poughkeepsie, N. Y.

Infallible Test for Silver Coin.

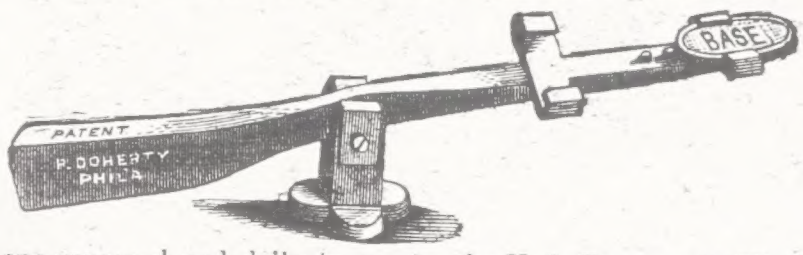

The only one approved and daily in use by the U. S. Treasury at Washington, the U. S. Mint at Philadelphia, and other Government offices, where ithas been thoroughly tested by experts, who recommend it as being *Perfectly Reliable*, and the best they have seen. This instrument makes by one move the THREE ESSENTIAL TESTS OF WEIGHT, DIAMETER AND THICKNESS. It detects the most dangerous counterfeit instantly. It has already proved its superior merit in over fifty banks, where it has taken the place of various other tests. It is very neat and strong, made of hard brass with steel pivot, finely and accurately adjusted and cannot get out of order.

We believe every invention made during the last quarter of the century, for the detection of counterfeit coin has been presented to us for inspection and endorsement, but *with this single exception* we have always found them unreliable; we therefore take pleasure in recommending it as of great practical value for the uses intended. Nicely enclosed in a box and sent to any address, with postage paid, on receipt of price.

PRICE, Plain, $2.00; *Silver Plated,* $3.00.

JOHN S. DYE.
605 Walnut St., Philad'a.

CURING PACKING AND SMOKING
ESTABLISHMENT.
JOHN BOWER & CO.,
PROVISION DEALERS,
S. W. Cor. 24th and Brown Sts.

JOHN BOWER.
FRANK BOWER.
W. ENTENMANN.

PHILADELPHIA.

Page 1877 Aug 26

The picture on the last page is a rough xerox of a photo of the only piece of this patent model that has been identified, just the plate marked D in the patent drawing. It is assumed that the scale part, if it still exists, was sold as is without the patent tag and cannot be located. The patent tag is in poor condition, but is attached to part D.

This is the only "coin scale" for which I have the patent model, and the only one which I know of having been found in the last 12 years of searching the remaining patent models. They have all been searched through once so it is unlikely that any scales or detectors will show up unless they were sold before 1973 by O. Rundle Gilbert in New York.

Erv Brauer

G. HOAG.

Combined Scale and Coin Tester.

No. 216,184. Patented June 3, 1879.

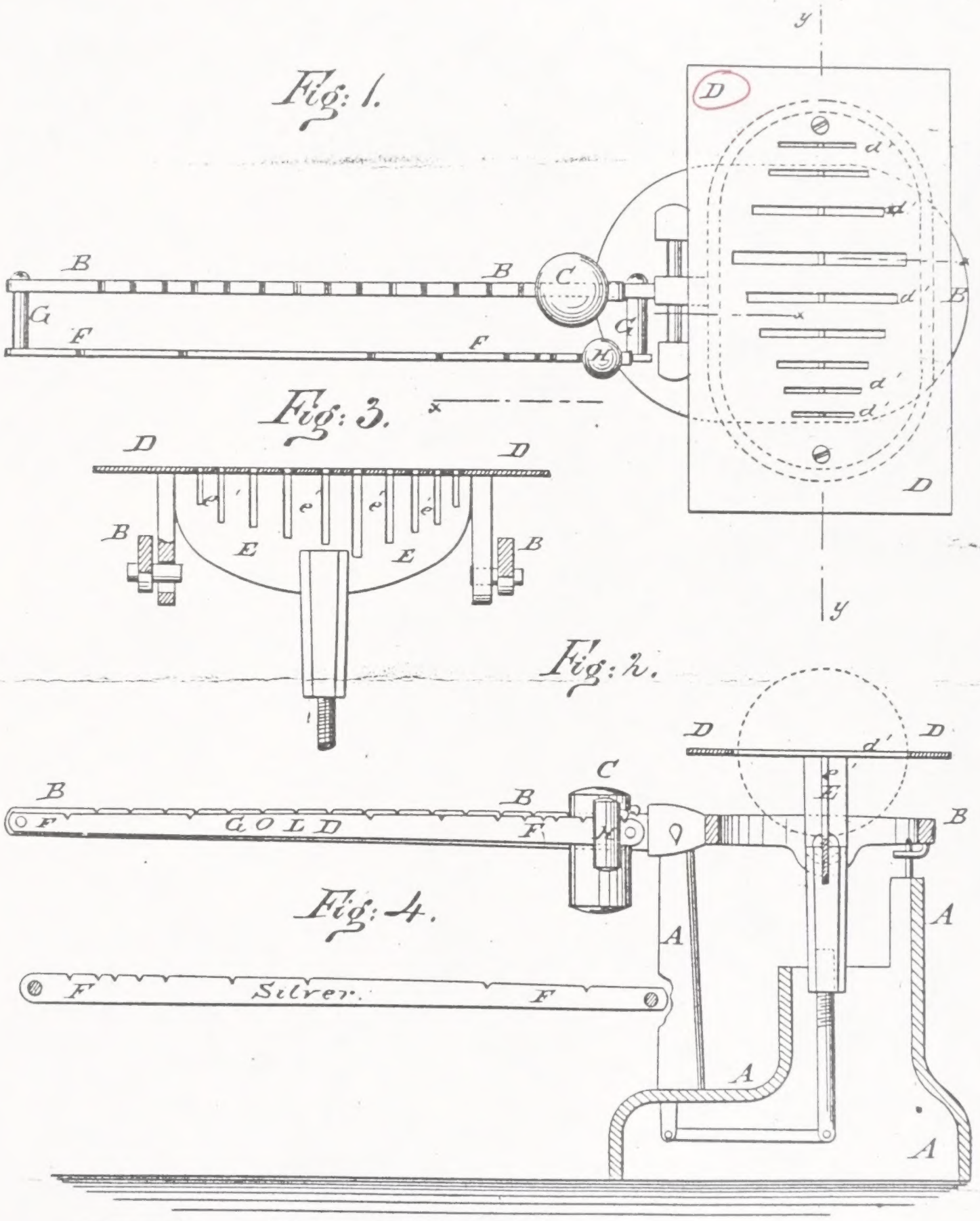

WITNESSES:

Chas. Nida.

C. Sedgwick

INVENTOR:

G. Hoag

BY Munn & Co.

ATTORNEYS.

N. PETERS, PHOTO-LITHOGRAPHER, WASHINGTON, D. C.

UNITED STATES PATENT OFFICE.

GEORGE HOAG, OF NEW YORK, N. Y.

IMPROVEMENT IN COMBINED SCALE AND COIN-TESTER.

Specification forming part of Letters Patent No. **216,181**, dated June 3, 1879; application filed March 27, 1879.

To all whom it may concern:

Be it known that I, GEORGE HOAG, of the city, county, and State of New York, have invented a new and Improved Combined Scale and Coin-Tester, of which the following is a specification.

Figure 1 is a top view of my improved device. Fig. 2 is a side view of the same, partly in section, through the broken line *x x*, Fig. 1. Fig. 3 is a detailed cross-section of the same, taken through the line *y y*, Fig. 1. Fig. 4 is a detail view of the reverse side of the coin-scale beam.

Similar letters of reference indicate corresponding parts.

The object of this invention is to furnish scales for weighing letters and other mail-matter which shall be provided with appliances for testing the weight, size, and thickness of coins, and which at the same time shall be simple in construction and convenient and reliable in use.

The invention consists in the combination of the slotted vertical plate with the slotted scale-pan of a scales, for testing the size and thickness of gold and silver coins; and in the combination of the second beam and its weight with the main beam and its weight, and with the scale-pan provided with the slots, and the vertical plate provided with the slots for testing the weight, the size, and the thickness of gold and silver coins, as hereinafter fully described.

A represents the standard, B the main beam, C the weight, and D the pan or platform, of the scales, which parts are connected together and balanced in the usual way.

The scale-pan D is made flat, and has a series of slots, *d'*, formed through it to receive the different gold and silver coins, the slots toward one end of the pan D being intended for the gold coins, and those toward the other end being intended for the silver coins. The slots *d'* are made of a length and breadth equal to the diameter and thickness of the various coins, so as to test their size and thickness.

To the central part of the lower side of the pan D is attached the upper edge of a vertical plate, E, which has slots *e'* formed in it directly beneath the slots *d'* of the said pan D. The slots *e'* are made of a breadth equal to the breadth of the slots *d'*, and of a depth equal to half the length of the said slots *d'*, so that the coins will be held with their diameters in line with the scale-pan D.

F is the beam which is used for testing the weight of the coins, and which is connected at its ends with the main beam B by bolts, screws, or rivets G. The beam F is provided with a weight, H, for balancing the coins. In the upper edge of the beam F are formed notches at the various points where the weight H should stand to balance the various coins.

The notches for the gold coins should be marked upon one side of the beam F, and the notches for the silver coins should be marked upon the other side of the said beam, with the value of the coins to which they belong.

The slots *d'* in the scale-pan D may also be marked with the value of the coins to which they belong.

With this construction the device, while serving as a scale for weighing letters and other mail-matter, also serves as a test for the size, the thickness, and the weight of gold and silver coins.

Having thus fully described my invention, I claim as new and desire to secure by Letters Patent—

The combination of the scale-pan D, consisting of a horizontal plate, provided with slots *d'*, and the vertical plate E, provided with the slots *e'*, and the supplemental scale-beam F, secured by the bolts G to the scale-beam B, so as to be parallel with the said beam, and provided with the weight H, with the main beam B and its weight C, substantially as and for the purpose set forth.

GEORGE HOAG.

Witnesses:

JAMES T. GRAHAM,

C. SEDGWICK.

PLATE D

SKINNER

Auctioneer and Appraisers of Antiques and Fine Art

Prices include buyer's premium.

Science & Technology, 05/03/2003 10:00 AM, Venue: Bolton

Lot	Price	
435	$117.50	
437	$88.13	
439	$1,527.50	
440	$1,997.50	
441	$411.25	
442	$940.00	
443	$1,175.00	
444	$1,116.25	Ellickhuysen
445	$117.50	
446	$117.50	
447	$82.25	
448	$146.88	
449	$58.75	
450	$58.75	
451	$205.63	
452	$176.25	
453	$1,175.00	
454	$117.50	
455	$176.25	
456	$293.75	
457	$381.88	
458	$1,292.50	
459	$1,645.00	

Lot	Price	
460	$146.88	
461	$146.88	
462	$176.25	
463	$235.00	
464	$205.63	
465	$176.25	
466	$264.38	
467	$58.75	
468	$176.25	
469	$58.75	
470	$88.13	
471	$146.88	
472	$146.88	
473	$205.63	
474	$117.50	2 Sovereign rocker HYAMS
475	$117.50	
476	$88.13	
477	$3,055.00	Billings 1750 with wts + table -
478	$1,175.00	New England Old Tenor New Tenor (no maker)
479	$176.25	[redacted] English for Port span eng French
480	$235.00	Boxed com bal 1850 Legal Tender for 3/3/4 Act
481	$998.75	Allender WARRANTED tapered oval box
482	$646.25	Allender in tapered oval box

Lot	Price	
483	$293.75	Allender B&P RR
484	$293.75	Allender with #3 pat pend
485	$940.00	Allender with #3 in oval box
486	$1,410.00	Allender with #3 in rect box
487	$1,527.50	Red paint cast iron base for 25-50 overlap. rocker
488	$881.25	Seymour brass 25 50
489	$881.25	Brass rocker no name 25 50 possible Freeman
490	$1,880.00	Kronenberg with white top
491	$998.75	Maranville with brass ~~electrogalvanized~~ slide
492	$881.25	Maranville ~~[illegible]~~ with ~~[illegible]~~ dial
493	$146.88	Berman no postal.
494	$235.00	Berman with postal
495	$1,762.50	Thompson sled like tilter with center ridge
496	$1,116.25	McNally nickel plated walnut base in cardboard maker's box
497	$1,997.50	Fairbanks Infallible nickel plated in cardboard box & maker.
498	$411.25	McNally plating gone, wood base, ctw replaced
499	$998.75	Fairbanks Nickel plating rocker on wood base with ~~[illegible]~~
500	$470.00	Fairbanks Nickel plated rocker on cast iron base (ctw replaced)
501	$2,937.50	Fairbanks Coin & postal scale 2 arm lovely decorated brass & iron
502	$1,292.50	Fairbanks Single arm altered brass & iron

Interested in

405 Chatillon

477 Billings

480 Com Bel, 1843 Act

481 Warranted Allenden

485 Allenden for box only

496 Fairbanks box only

497 Fairbanks box only

~~498 Fairbanks box only~~

What did he sell

1634.50-SFN	1878 AU50 ....70.00	1637.50-SFN	1878-CC AU50 ....145.00	1653.60-SFN	1881-S MS60 ....62.00
1634.55-SFN	1878 AU55 ....80.00	1637.55-SFN	1878-CC AU55 ....185.00	1653.63-SFN	1881-S MS63 ....72.00
1634.60-SFN	1878 MS60 ....99.00	1638.50-SFN	1878-S AU50 ....70.00	1653P.63-SFN	1881-S (PCGS), MS63 ....72.00
1634.63-SFN	1878 MS63 ....135.00	1638.63-SFN	1878-S MS63 ....100.00	1653N.63-SFN	1881-S (NGC), MS63 ....72.00
		1638P.63-SFN	1878-S (PCGS), MS63 ....100.00	1653.64-SFN	1881-S MS64 ....95.00
		1638.64-SFN	1878-S MS64 ....115.00	1653P.64-SFN	1881-S (PCGS), MS64 ....95.00
		1638P.64-SFN	1878-S (PCGS), MS64 ....115.00	1653.65-SFN	1881-S MS65 ....165.00
		1639.12-SFN	1879 F 36.00	1653P.65-SFN	1881-S (PCGS), MS65 ....165.00
		1639.20-SFN	1879 VF 41.50	1654.08-SFN	1882 VG 32.50
		1639.40-SFN	1879 XF 45.00	1654.40-SFN	1882 XF 43.50
		1639.60-SFN	1879 MS60 ....65.00		

Visit our website at
www.littletoncoin.com

Dear Littleton

"Thank you for my last order. The three Morgan dollars from New Orleans. They are beautiful! In this day of fast food and faster computers, I really like the quality of Littleton and most of all the personal touch for all my collecting wants and needs. Keep up the good work!"

M.B.
Anything, KS

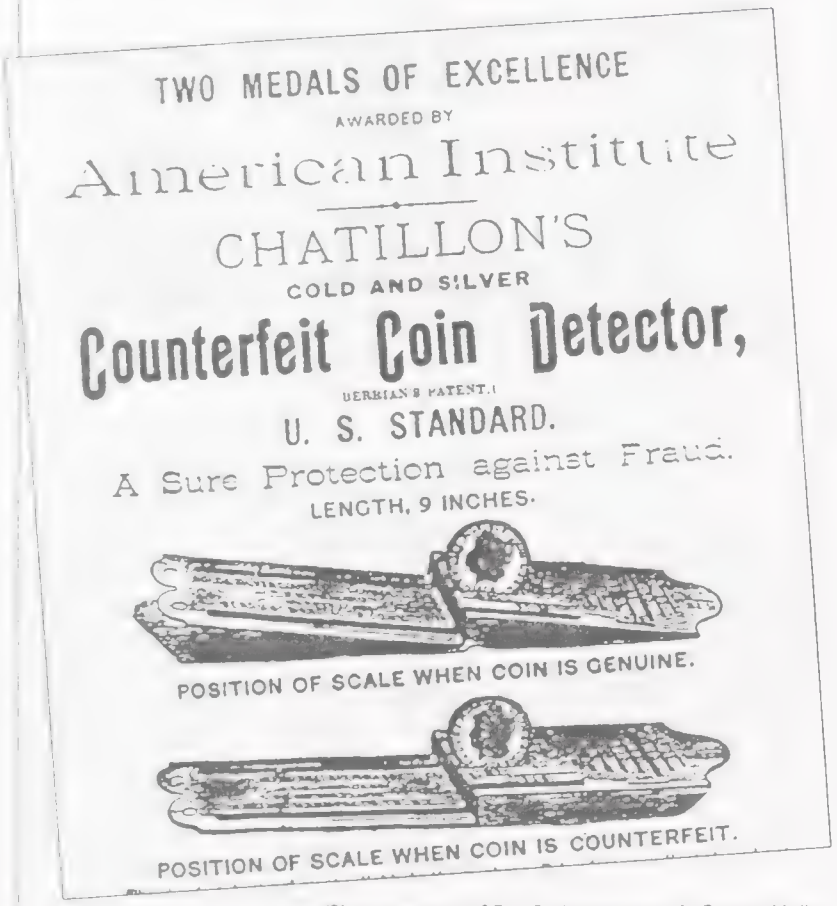

(Photo courtesy of Eric P. Newman and A. George Mallis, authors of U.S. Coin Scales and Counterfeit Coin Detectors.)

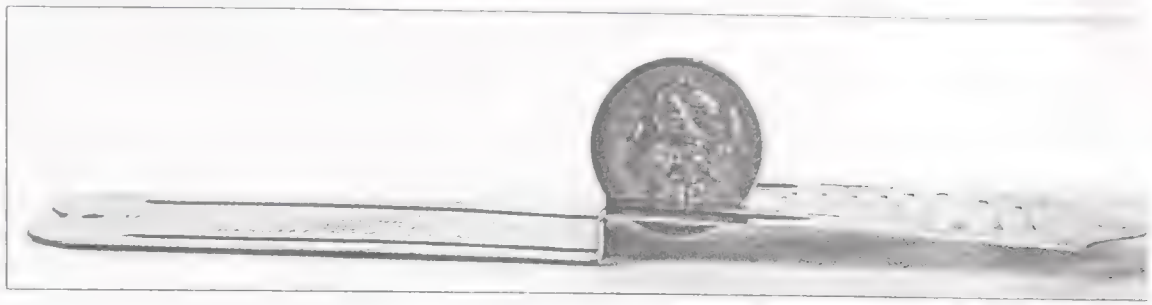

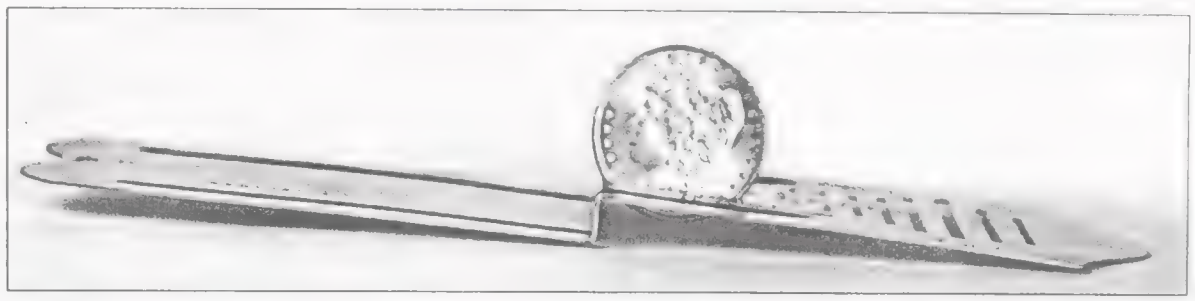

With a counterfeit coin, the detector remains balanced as shown above. When a coin is genuine, like the one shown at the left, the detector is tipped to one side.

In 1873, the discovery of the richest single silver deposit in history, nicknamed the "Big Bonanza" (the Comstock Lode), yielded the precious ore for one of the world's most popular coins – the Morgan silver dollar! With the advent of widespread silver dollar production, there was an increase in the amount of counterfeiting.

Since ancient times, coins struck in precious metals such as gold and silver have been counterfeited by unscrupulous individuals for their own personal gain. But methods used to produce a counterfeit coin made it very difficult to match the exact weight, thickness and diameter of the genuine coin. So various types of scales were created for use by bankers and merchants, enabling them to identify counterfeit coins.

The scale shown above was patented in the 1870s, just about the time the Big Bonanza was discovered. This scale was known as a rocker or bent plate design. Unlike some earlier more complex counterfeit detecting devices, this one was very easy to use. By simply placing a silver dollar in the designated slot you could tell if the coin was genuine. If the scale tipped to one side, the coin was genuine. But if the coin remained balanced, the coin was underweight and therefore a counterfeit. Another indication that a coin was counterfeit was if the coin was too thick or thin to fit properly in the appropriate slot. Because today's circulating coinage is no longer struck in 90% silver, counterfeiting is no longer common.

UNITED STATES PATENT OFFICE.

JOHN A. THOMPSON, OF CHICAGO, ILLINOIS.

COUNTERFEIT-COIN DETECTER.

SPECIFICATION forming part of Letters Patent No. 224,807, dated February 24, 1880.

Application filed January 12, 1880.

To all whom it may concern:

Be it known that I, JOHN A. THOMPSON, of Chicago, in the county of Cook and State of Illinois, have invented certain new and useful Improvements in Counterfeit-Coin Detecters; and I hereby declare the following to be a full, clear, and exact description thereof, which will enable others skilled in the art to which my invention appertains to make and use the same, reference being had to the accompanying drawing, forming a part hereof, and in which the figure represents a perspective view of a counterfeit-coin detecter embodying my improvements.

The object of my invention is to provide a device that will readily and surely detect counterfeit from genuine coin; and my invention consists in the construction of the device or detecter, as hereinafter described and claimed.

It is well known that when coin is made wholly or in part of base metal it is lighter than genuine coin of the same size, and if made of the same weight it must necessarily be thicker or larger in diameter than the genuine coin.

In the drawing, A represents a plate of sheet metal of known gage and weight, preferably of brass or German silver, and may be of any desired dimensions, and which is first stamped from a flat piece of metal, and its depending and tapering sides or flanges afterward formed as shown, so as to form the fulcrum of the plate.

In the center of the plate, and running from end to end, is a struck-up rib, *a*, which stiffens and strengthens the plate and divides it into two parts, one side of which is adapted and marked for gold coin and the other for silver. On either side of the rib *a* is a series of slots or perforations, *b*, each of which is of the same width for about one-third of its length, and then gradually increasing in width, so as to form a tapering slot toward the fulcrum of the plate, said slots being of a width sufficient to receive and hold the coin of the desired denomination without allowing it to pass wholly through.

Each of the slots *b* is made wider at its end nearest the fulcrum of the plate, so as to readily receive the coin, while its other end is made of a width corresponding to the thickness of the coin, so that when a genuine coin is placed and held within the slot corresponding to its denomination it will cause the plate to tip down over the fulcrum *c* nearest to such coin, the fulcrum *c* being previously adjusted for that purpose. If the coin is made thicker than and so as to correspond in weight with the genuine coin it will not pass within the desired slot to its proper place, and will, consequently, fail to tip the plate on its fulcrum.

It will be observed that the flanges *d* are made tapering from at or about their fulcrums to their ends, and that the plate A is provided with two fulcrums, *c*, which are formed out of and as a part of the flanges *d*. The space *e* between the fulcrums *c* need not necessarily be cut out, and the notches *f* may be filed away (more or less) for the purpose of adjusting the fulcrums to the plate.

Having thus described my invention, what I claim as new, and desire to secure by Letters Patent, is—

1. In a counterfeit-coin detecter, the plate A, provided with the tapering slots *b*, substantially as shown and described.

2. In a counterfeit-coin detecter, the plate A, provided with the tapering slots *b*, tapering flanges *d*, and fulcrums *c*, substantially as shown and described.

3. In a counterfeit-coin detecter, the plate A, provided with rib *a*, tapering slots *b*, tapering flanges *d*, and fulcrums *c*, substantially as shown and described.

JOHN A. THOMPSON.

Witnesses:

WM. ZIMMERMAN,

N. COWLES.

5/8" diam = .313 sq in × .125 = .0393 cubic inches

F.S could be U.S in another language or Federal State of Federated States

Colorado Issues Silver Token Slugs

TO FINANCE PARTICIPATION IN THE CENTURY OF PROGRESS EXPOSITION.

As the State Legislature of Colorado failed to appropriate funds for the State to be represented at the coming Century of Progress Exposition, the local civic bodies, cooperating with other civic and State organizations outside of Denver, adopted a unique plan to raise the needed funds to be represented, along with 32 other States, at the coming Century of Progress Exposition to be held at Chicago this year. About $60,000 was needed to assure success of the undertaking. Failure of Colorado to provide a suitable exhibit at the exposition would be suicidal for this State's industries and products was the thought of everyone interested in the welfare of this Commonwealth. How to raise the sum of $60,000 was another problem. Finally, the Colorado Century of Progress Commission announced that a suitable plan had been worked out by which the necessary amount of money could be raised in 30 days—the limit— if the exhibit is to be ready in time. On February 1 John T. Burns, field commissioner for the Colorado Century of Progress Commission, announced at the meeting that the commission will offer for sale one-ounce discs of pure silver at $1.00 each. The silver was bought at the present market price of 28 cents. Profit from the sale of these discs will be contributed to the exposition fund. On February 2 the sale of these pure-silver tokens started in earnest in Denver and other Colorado cities and towns. Governor Ed C. Johnson of Colorado purchased the first token. On the obverse of each token is the Great Seal of the State of Colorado. The reverse has the following: "One Avdp. Ounce Fine Silver. Silver will Restore Prosperity to Colorado." Only 300 of these slugs were struck or stamped (incuse) and they were quickly sold and absorbed by the Chamber of Commerce members, Denver Real Estate Exchange members and their friends. This first 300 tokens were nearly all sold by February 4, and on February 6, when the second variety of the reverse appeared, the remaining few of the first 300 were selling at a premium. I was fortunate, after considerable effort, to secure a few of those first impressions at premium price. Soon they'll be out of reach. It was agreed, after the first 300 were struck or stamped, that the two words "to Colorado" on the reverse should be omitted, which was done, and on February 6 the second variety was put on sale. This second variety, obverse and reverse, is from the same dies as the obverse and reverse of the first 300, the only difference being that the two words "to Colorado" on the reverse were omitted. The omission of the two words leaves the space on the bottom of the reverse unfinished, so a third change of the reverse is considered, which change may affect the obverse as well. These slugs, especially the first 300, are very attractive in appearance, are made of pure silver the size of a U. S. silver dollar, both plain edges. Of this second variety up to now, about 2700 have been struck or stamped. As stated, they are to be sold at $1.00 each. The cost of manufacture and distribution will leave the exhibit committee about 65 cents profit on each token. The sale of this Century of Progress token is supplementary to the "Buy-an-Ounce-of-Silver" drive now going strong in Colorado, Nevada and Montana, and which was started about a month ago by a local investment firm. In a month's time three different types were issued by the investment firm. The two varieties of the Century of Progress swell it to five, which is quite unusual for Denver, and keeps us collectors on the jump. A description of the two varieties is given below:

No. 1—Obverse, between two circles, above, "A CENTURY OF PROGRESS," below, "SOUVENIR." Within the inner circle the seal of California. Reverse, within a circle, ONE AVDP. OUNCE FINE SILVER 1933. In the center, in five lines, SILVER WILL RESTORE PROSPERITY TO COLORADO.

No. 2—Obverse, same as No. 1. Reverse, same as No. 1, except that the words TO COLORADO have been omitted.

Of variety No. 1, only 300 were struck. They are rare now and selling at a premium. Of variety No. 2, 2700 were struck and are selling at $1 each, postage extra.

[illegible] State, Nevada [illegible]

set

of slugs were struck for them here in Denver. I'm expecting some and will describe them in the April number. The silver drive is also going on in Montana. If silver reaches a ratio of 16 to 1 once more, the ounce silver slugs will be considered a good investment.

I have just learned that the city of Golden (a suburb of Denver) will issue scrip money to aid the jobless. I will describe and illustrate it in The Numismatist in the near future, along with other material on hand.

HONEST CHINY.

2023 Lafayette St., Denver, Colo.

ARE THESE COIN WEIGHTS?

Stamped metal discs having the appearance of coins occasionally turn up to perplex the collector when he attempts to identify or attribute them. A set of such pieces was recently found in an old well in Springport, Ind. that is said to have been dug about 100 years ago. It is assumed they have only recently been found.

We have seen only one piece of the set, and a description of this will suffice for all. The disc is ⅝ inch in diameter and ⅛ inch thick, and the metal resembles brass. The impression is: "U S Dollars 3" in three lines. The "U S" and "3" are incuse, and the word "Dollars" is in relief in a rectangular depression. This piece is illustrated here.

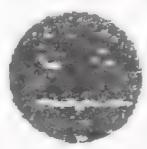

Other pieces in the set are similar, but are stamped "10," "5" and "2." Two other pieces are stamped "F S" (instead of U S) "5" and "3." The larger denominations are on discs proportionately larger and thicker than the "3."

The discs are probably money weights for gold coins. The absence of weights for $2½ and $1 pieces can be accounted for if we believe that they were originally in the set but were not found with others. The discs are old, possibly older than any $3 or $1 gold pieces. As no $4 gold pieces were ever in circulation, a disc for weighing coins of that denomination seems unnecessary. The letters "F S" instead of U S on two of the pieces remains to be explained. Can any of our readers contribute information on the subject?

Money weights and scales were in universal use in the principal European countries many years ago. Their use extended over a long period. Gold has never circulated freely in the United States, although in the half century before the Civil War it was used much more extensively than it has been since that time. It was a common practice for banks and the larger business houses to have scales and weights on their counters for weighing gold when offered in business transactions.

MR. DUNHAM'S ONE-MILL TOKEN PROVES POPULAR.

The one-mill token issued by Wm. F. Dunham, of Chicago, and illustrated in our issue of last month, has proved popular, and requests for specimens have come from all parts of the United States, many of them by air mail and by telegrams. Owing to the great demand for the tokens Mr. Dunham has authorized us to make the following announcement:

"After the March issue of The Numismatist our 'one-mill' offer will be limited to members of the A. N. A. In requesting one, give A. N. A. number, and you will not be disappointed. One for each member. No extras. None sold."

Mr. Dunham's address is 1936 North Clark street, Chicago, Ill.

FROM : MONEY MUSEUM FAX NO. : 3145163403 Oct. 16 2000 03:18PM P1

Pittsburg.

CITY OF PROVIDENCE
built 1880 Anchor Line
then sold to Columbia Excursion
C. St Louis & became an
excursion boat out of St Louis
Burned by us in 1910
Whistle was used on
Mississippi steamers
Washington, Chancellor and
Ohio Senator.

DAVENPORT small Steamboat ferry built 1904
run Davenport - Rock Island.

MISSISSIPP (Steamboat inspection vessel built 1882 - Sp Louis
Theodore Roosevelt rode her in 1907
in 1919 Sunk in 1920 Sp Louis harbor

RALPH HICKS #465 gasoline stern wheel pleasure boat
originally named Albermatla converted in 1914
originally owned by George S. Johnston of Alton

ALBERMATLA built in 1902 became
OF ST LOUIS Ralph Hicks in 1914

LOUISIANA Jeffersonville Indiana 1880
originally Joseph Henry sold in 1903
for excursions. During World's Fair of St L
ran St L to Alton by Bluff City Excursion
Co. Dry in 1908 + moved to Memphis
and renamed PATTONIA in 1909

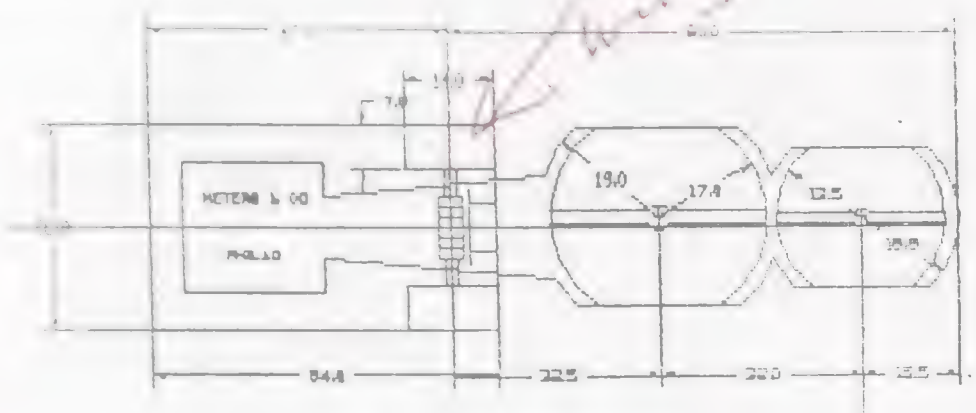

20 D AND 10 D BEAM

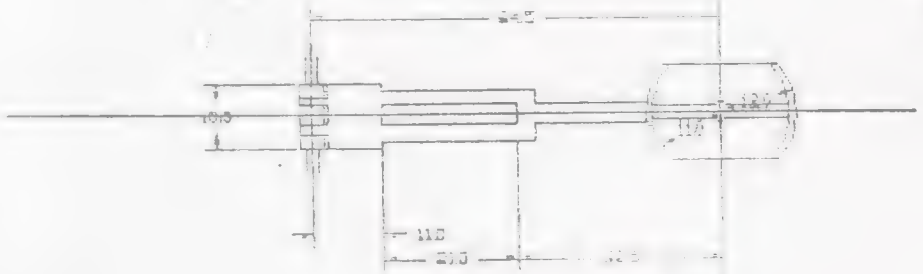

5 D LEVER BEAM

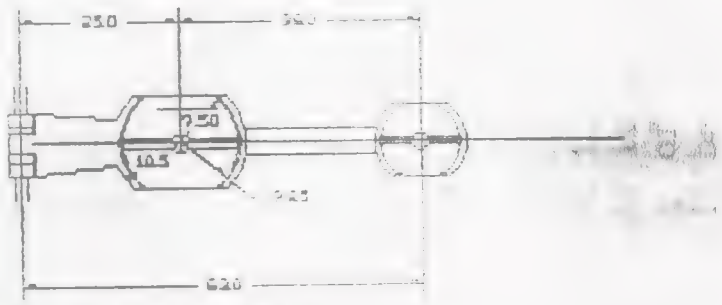

2 1/2 D AND 1 D LEVER BEAM

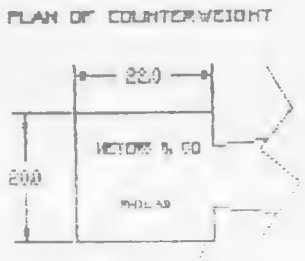

PLAN OF COUNTERWEIGHT

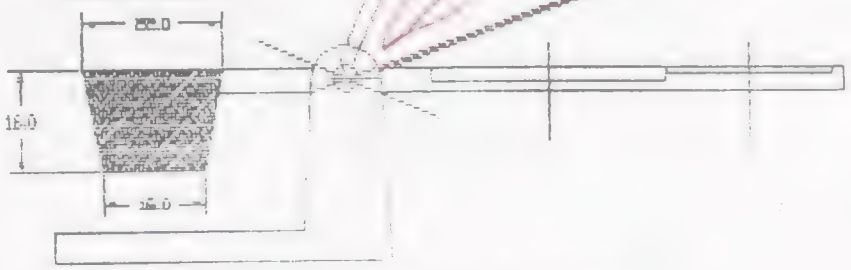

SECTION OF COUNTERWEIGHT

2 1/2 & 1 D LEVER BEAM BEING FLIPPED TO ALLOW FOR THE WEIGHING OF A 5 D COIN OR 20 D OR 10 D COIN, IF 5 D LEVER BEAM IS ALSO FLIPPED

ELEVATION OF DETECTOR SHOWING THE FLIPPING OF THE OTHER TWO BEAMS DURING THE WEIGHING OF [illegible] COINS

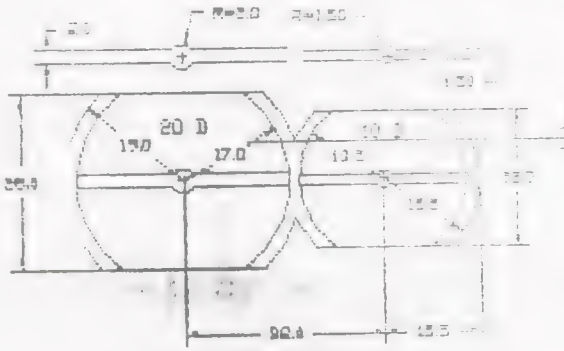

PAN DETAILS OF 20 D AND 10 D

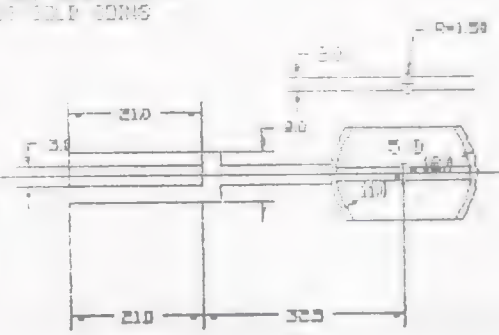

DETAILS OF 5 D BEAM

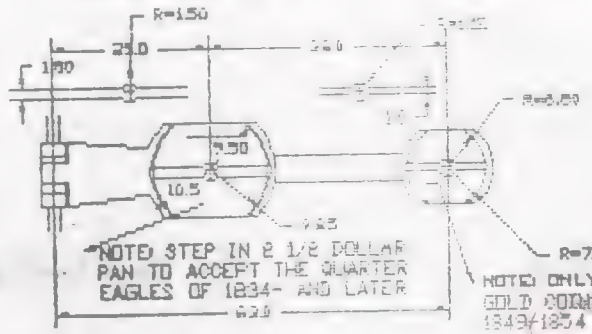

NOTE: STEP IN 2 1/2 DOLLAR PAN TO ACCEPT THE QUARTER EAGLES OF 1834- AND LATER

NOTE: ONLY FOR $1 GOLD COINS OF 1849/1854

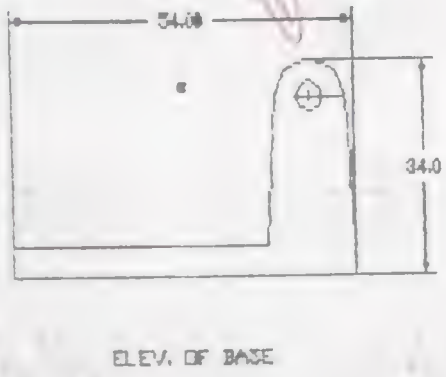

ELEV. OF BASE

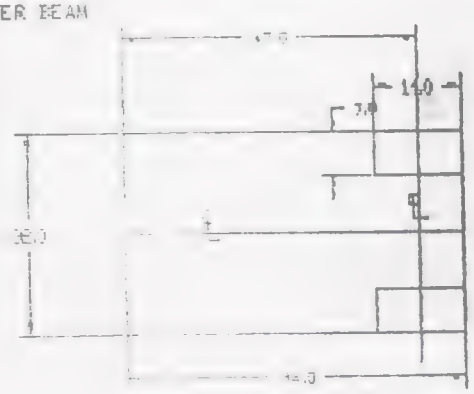

PLAN OF BASE

BASE DETAILS

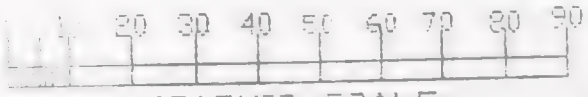

GRAPHIC SCALE

COPYRIGHT © 1995
ERIC P. NEWMAN
A. GEORGE MALLIS

DETAILED DRAWING PREPARED BY A. GEORGE MALLIS, P.E. FROM EXAMPLE IN THE COLLECTION OF ERIC P. NEWMAN

DESIGN DETAILS

KEYSER & CO. THREE SCALE VICE AS TAPPING AN EXAMPLE

A. GEORGE MALLIS, P.E. CONSULTING ENGINEER 7 [illegible] ROAD [illegible]

Aug 9, 1851

lass of persons who pay for admission is regarded by the Governors, as one ıres of the establishment, as it brings the aid of the highest medical and each of persons from all parts of the State, whose circumstances, though ings, would not permit them to ask admittance as paupers, whilst their ıate to provide elsewhere the professional and other attendance required e severe forms of disease.

g the past year, 1,145 were women, 814 paid for themselves or in part, 95 961 were paupers, making the whole number treated 3,296. Of the pay ers, and remained such during their continuance in the hospital.

ermitted to go the rounds with the attending surgeons, for the annual fee l Lectures by the attending Physicians and Surgeons, and other regular ered, and are attended by students from all parts of the Union. The fees dance upon these lectures are devoted to the increase of the fine medical nearly 6,000 volumes.

ERIOR OF THE MINT—THE ADJUSTING ROOM.

ıia has sent us two engravings, rep- weighing and coining rooms in the rations of melting, rolling and cut- rate departments of the building, that undertaken solely by ladies, engraving, viz: the adjusting the tal. This is done, of course, with re the coining takes place. The treme accuracy required, when we ısted to the fraction of a grain, and yed in the operation, the fingers of ge and clumsy. The tables are fas- ing to prevent the slightest move- ld seriously affect the adjustment. sents the coining room, where, after metal is properly adjusted, it is ta- our artist visited this room, the en newly erected, was not in opera- wever, that it would soon be in use.

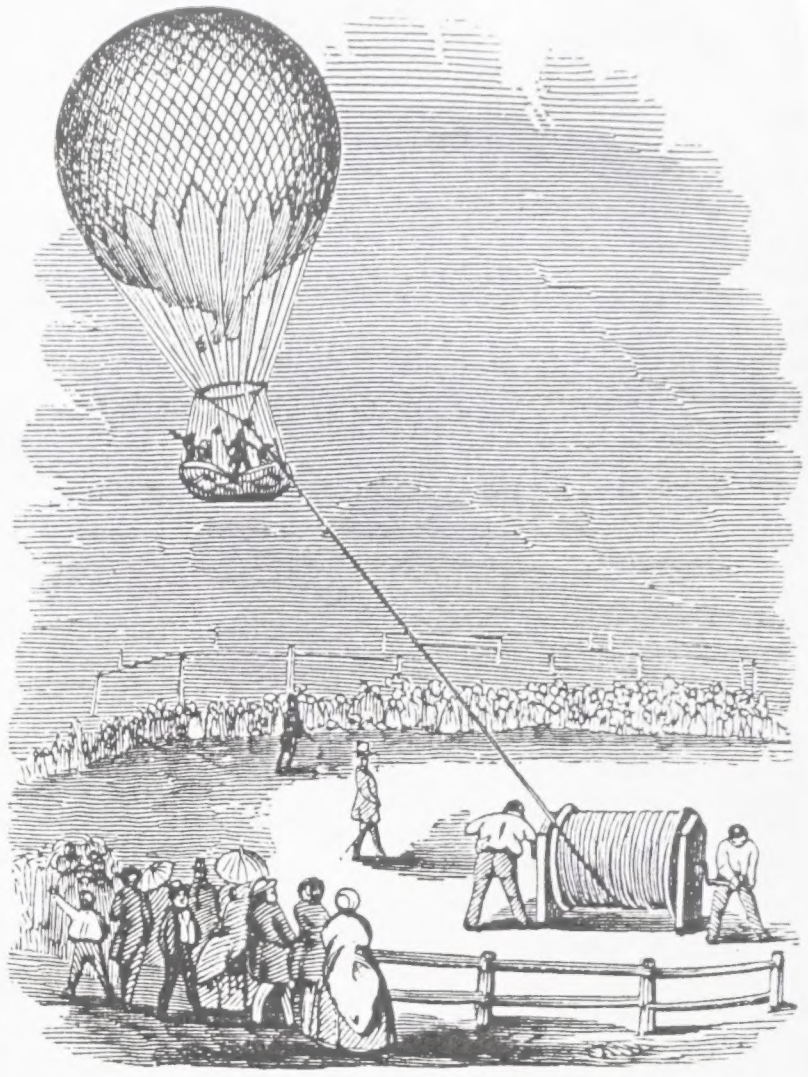

BALLOON ASCENT AT PHILADELPHIA.

Our engraving represents a balloon ascension recently made at Philadelphia by M Wise, the noted æronaut. Two ladies and one gentleman accompanied him. The bal loon rose gracefully to the height of over one hundred feet and remained stationary for a few minutes. It was then drawn down by means of a windlass, to which the end of the rope was fastened. A day or two after, in attempting to repeat the ascension Mr. Wise lost his monster balloon. The process of inflation commenced in the morn ing, and was continued until two in the afternoon, being interrupted by flaws of wind which forced the gas back from the balloon to the pipe. Finally, about five o'clock a heavy flaw struck the balloon and ripped it from top to bottom, and the immense a sunk to the ground.

Morals of Saratoga.—The *Saratoga Republican*, in an article on "Vices at Saratoga," contends that, notwithstanding all that the croakers say, there has been a great improvement in the morals of the place within the last twenty-five years. Formerly it was no uncommon thing to see all kinds of gambling devices surrounded by their numerous votaries, publicly exposed in the famous "Pine Grove," where gambling was carried to excess, unmolested during every Summer season. These things were then practised with perfect impunity, and tolerated and winked at by the police authorities and the public in the very centre of the village. The vice still exists, but is neither so bold nor so common as it has been. There is also far less intemperance (in proportion to the population) now than there was a few years ago. This is encouraging.

American gentlemen look like gentlemen—not because they have lemon-colored kid gloves, or Parisian boots, but from their whole air and manner. As to being merely well-dressed in the cost-and-quality-of-material sense of the word, tha most every body is. A mob in the United States is a mo broadcloth. If we may talk of a rabble in a Republic, it rabble in black silk waistcoats (the favorite wear among tain classes in America) and well-brushed hats. Therefor look really like a gentleman in the United States, depend nowise on the clothes, but entirely on the wearer; and tailor has less to do with manufacturing a gentleman h than in perhaps any other part of the world. For in all o countries you are a *little* assisted to the conclusion, unwitt ly, by the dress; but here not in the least, and you must ju wholly by *l'air noble et distingue*, or the reverse of the ind ual.—*Lady Stuart Wortley's Travels in the United States.*

Newspapers.—The number of newspapers taken by the ple of the United States annually, averages over sixtee every inhabitant, man, woman or child. In the British em one person in 12,000 takes a newspaper, in Belgium on 20,000, in Russia one in 33,000, in Prussia one in every 20.

flaw = windflaw

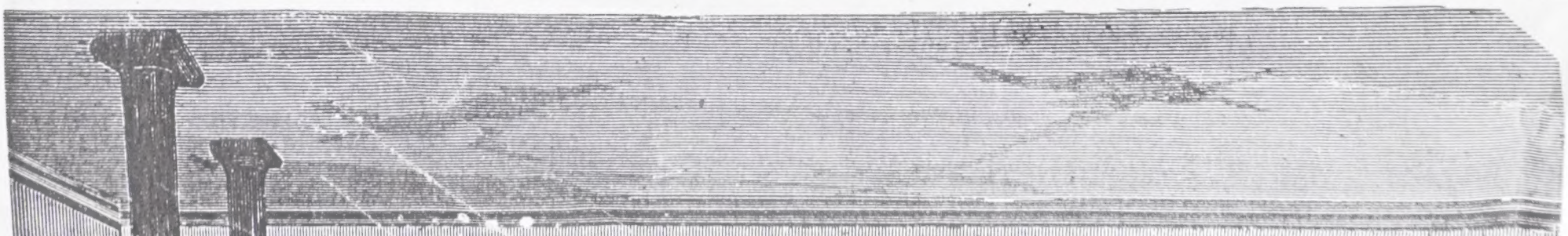

4 Japanese shovel counters

German coin sorter elec rotary

French coin elect rotary

Plastic Sort by shaking

Another Abbott coin sorter Type 4EC NY on stand (elect)

Satco 801-AC coin sorter large diagonal wheel.

Brass coin Rich's Patent Tobacco Box English

Money Factory Plastic Coin Separator

Abbott Coin Counter (Elec Motor) Type 4E NY up to $1 coin

Johnson Lightning Cashier Type 132 Chicago

F&E Lightning Coin Changer Hedman Mfg Co Chicago Series E.

Johnson Coin Sorter Chicago slope with Durron counters

Klopper Engineering Coin Counter elec Detroit

Coinometer Changer Chicago

Unidentified Coin ~~Changer~~ sorter elec motor driven

Klopp coin sorter on stand Detroit

Johnson lightning changer

Assorted coin tubes

Assorted coin change racks

Johnson lightning

Coinometer Type A

20 coin rejectors & acceptors

6 English coin tills

40 coin scales Am & English mostly

2 El Chargers (English)

2 Slaats chargers gold silver copper silver

Eric P. Newman Numismatic Education Society
(Mercantile Money Museum)

Coin Handling Equipment (1830-Present)

Abbott coin sorter
Satco coin sorter
Abbott coin counter
Johnson Lightning Cashier
F & E coin changer
Johnson coin sorter
Brandt coin changer
Coinometer coin changer
Staadt coin changer (gold, silver, nickel, & copper coin)
Staadt coin changer(silver,nickel & copper coins)
"EL" mahogany coin changer (English) with cup containers
About 40 different American and English counterfeit coin detectors (mechanical)
About 6 English coin tills (Pub tills)
Coin racks for U.S. and foreign coins
About 20 coin acceptors for vending machines (Coin Rejectors, Coin Acceptors, Coinco, etc.)
Japanese coin shovels for counting
Chinese coin shovels for counting
6 Turkish pocket coin weights
Pocket equal arm coin balances (American and English)
German coin separator (electric)
French coin separator (electric)
Money Factory plastic coin separator
Plastic coin sorter tray sets for separation by shaking
Technicount paper money counter (doesn't work)
Plastic slide coin separator and counter
Some duplicates

ISASC

INTERNATIONAL SOCIETY OF ANTIQUE SCALE COLLECTORS

CERTIFICATE OF MEMBERSHIP

This Certifies That

Eric Newman

is a member of the International Society of Antique Scale Collectors, a corporation not for pecuniary profit, and is entitled to all rights and privileges of membership and subject to all the conditions granted or imposed by the By-Laws of said Corporation now or at any time hereafter in force and effect.

In Witness Whereof,

the said Corporation has caused this Certificate to be signed by its duly authorized president and to be sealed with the seal of the Corporation, this first day of January, A.D. 19 79

Incorporated under the laws of the State of Illinois

President

© GOES 353